BENEFITS

ZORK SPK

Turn Heads, Drive trial, Build Loyalty.

***ZORK SPK** is a market driven, re-sealable closure for sparkling wines. It delivers on performance, functionality & value; helping your brands turn heads, drive trial and build loyalty in a crowded international marketplace.*

SPK is the world's first resealable closure for sparkling wines designed to keep your wines fresh for weeks after opening.

Based on our patented, design we offer a selection of two closures differing in Performance and Price.

SPK Premium incorporates an inner foil & soft seal provide high barrier performance extending the shelf life of your wine.

SPK closures can be applied at high-speed using change parts for standard bottling equipment.

Our unique 'tamper obvious' design makes the use of a foil hood optional helping your brand to differentiate with a strong, consumer focussed benefit.

SPK creates a strong competitive advantage for your brand with a closure that is;

Intuitive - SPK closures are easy and safe to open by hand, simple and secure to reseal.

Effective - SPK closures deliver consistent performance, ensuring your wine is delivered to the consumer just as the winemaker intended.

Distinctive - SPK closures have a strong on-shelf presence, providing 'cut through' in a crowded retail environment.

BENEFITS OF SPK

For the Winemaker;
- Preserves the sparkle
- Reliable, consistent

For the Marketer;
- Creates market differentiation
- Traditional or contemporary

For the Production;
- Cost competitive
- Reliable and efficient bottling

For the Consumer;
- Safe and easy to open
- Maintains freshness

Contact us

Phone: +27 69 6499 837
Email: sales@zorkclosures.co.za
Web: ZORKclosures.co.za

COLOURING

ZORK SPK

SPK provides visual differentiation yet retains the elegance expected of a quality wine brand. With SPK's high quality satin finish and unique design, the use of a foil hood is optional.

STANDARD CAP AND COLLET COLOURS

Flat Black	Red PMS 704	Metallic Silver	Metallic Gold

COLOURS

SPK is available in standard and custom colours. Cap and Collet are separate components. Colours can be mixed or matched, depending on your branding requirements.

Standard SPK colours are black red, silver and gold.

Custom colours can be matched to a PMS code or as close as possible to a credit card size colour swatch. All new custom colours are subject to technical testing.

Contact us

Phone: +27 69 6499 837
Email: sales@zorkclosures.co.za
Web: ZORKclosures.co.za

ZORK SPK

SPK has been designed to suit global industry standard crown/cork sparkling wine bottle finishes.

SPK suits the industry standard 29mm crown cork & wire neck finishes.

CETIE GME 13.05 or 13.04 (or equivalent) neck finishes

SUPPLIERS
The following suppliers have been consulted regarding the specifications of their equivalent sparkling wine bottle finishes.

Contact your supplier for details & quote the finish specification number below.

Please note that SPK is approved for use on 'crown-cork' finishes only and may not be suitable for 'cork only' finishes.

AUSTRALIA

O-I	GCS 56421
AMCOR	C12

EUROPE

Owens Illinois	PV-22209-2565-00
Saint Gobain	NFH 35-029
Saver Glass	Code No. 0603

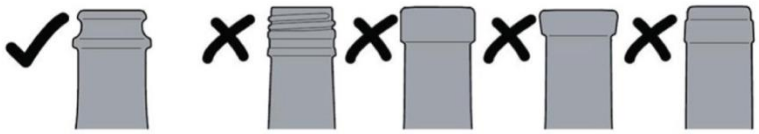

CETIE GME 13.05

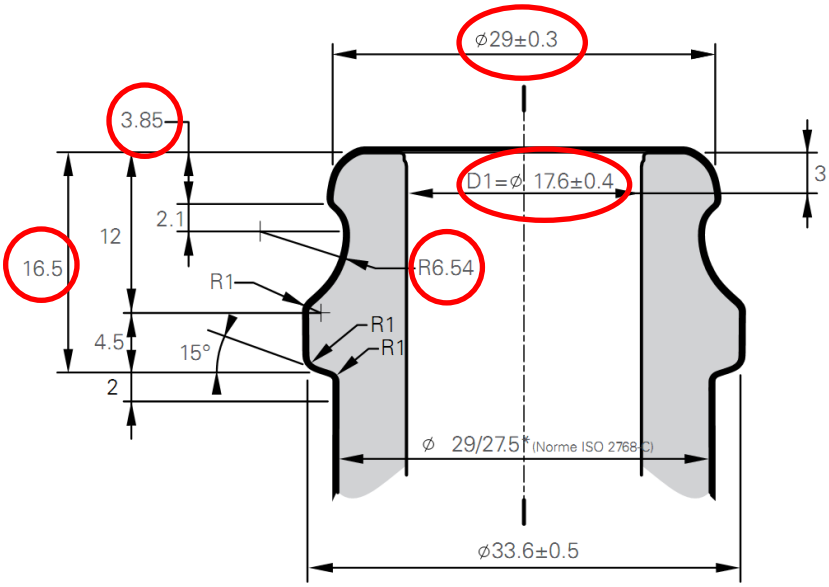

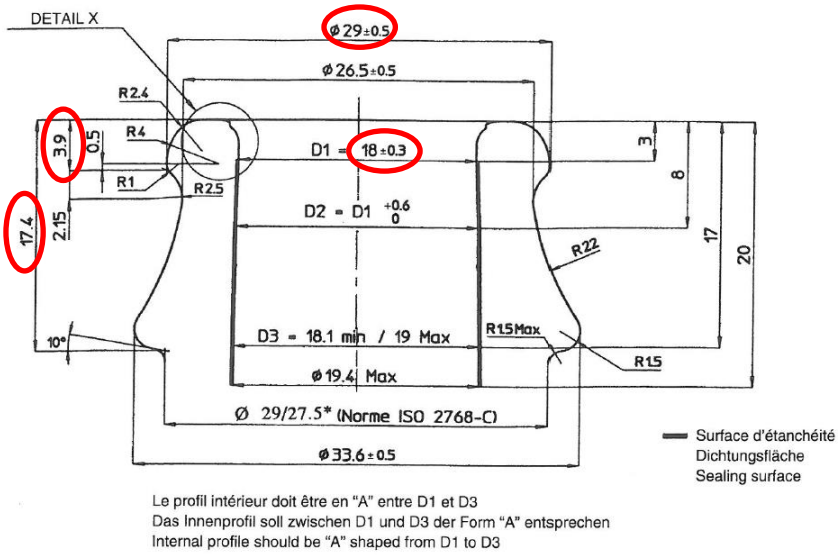

Contact us

Phone: +27 69 6499 837
Email: sales@zorkclosures.co.za
Web: ZORKclosures.co.za

ZORK SPK

The ZORK SPK is the world's first re-sealable closure for sparkling wines. SPK keeps your wine fresh for weeks after opening & offers consistent performance, consumer convenience and brand differentiation.

Cap

Collet

Foil

Seal

Performance Specifications	
CO_2 Loss (g/L/year)	0.5
OTR (cc/day)	<0.005
Weight (gm)	15
Bottle Neck Finish	NF H 35-029 CETIE GME 13.04
Extraction	<2.0Nm (torque)
Pressure	800kPa @ 50°C
Dimensions	47mm x 37mm
Logistics	
Foil Hood	Optional
Bottle Carton	No changes
Transport Conditions	No changes
Packaging	
Quantity/Carton	1,000
Carton Weight	16 kg (max)
Carton Dimensions (mm)	590 x 545x 230
Cartons/Pallet	32
Pallet dimensions	Width: 115cm Length: 115 cm Height: 215cm
Pallet weight	540kg
Materials	
Polyethylene	Low Density (LDPE)
Approvals	FDA & EU food contact
Recyclable	Yes

**Bottling must be conducted in accordance with recommended equipment & procedures*

Contact us

Phone: +27 69 6499 837
Email: sales@zorkclosures.co.za
Web: ZORKclosures.co.za

BOTTLING OVERVIEW

ZORK SPK

All non-custom elements of the bottling equipment are available direct from ZORKclosures for self installation or can be supplied through your preferred equipment supplier.

Elevator - No change is required to mechanical elevators.

Orientator - Rotary Disc change-over disc required.

Cap Chute - A change-over 40x50mm cap chute is required.

Cap Dispenser - A change-over cap dispenser / pick-off head is required.

In-feed Star Wheel - A neck wheel & guide is required on the in-feed star wheel & main turret.

Capping Head - SPK Capping Heads are required for each bottling line conversion. Magnetic Capping Heads are available for line trials or short-medium run sizes.

Other Equipment - No changes to any of the remaining packaging components or equipment are required.

Suppliers - Most equipment manufacturers can supply change parts for bottling line conversions & can assist with any modifications required.

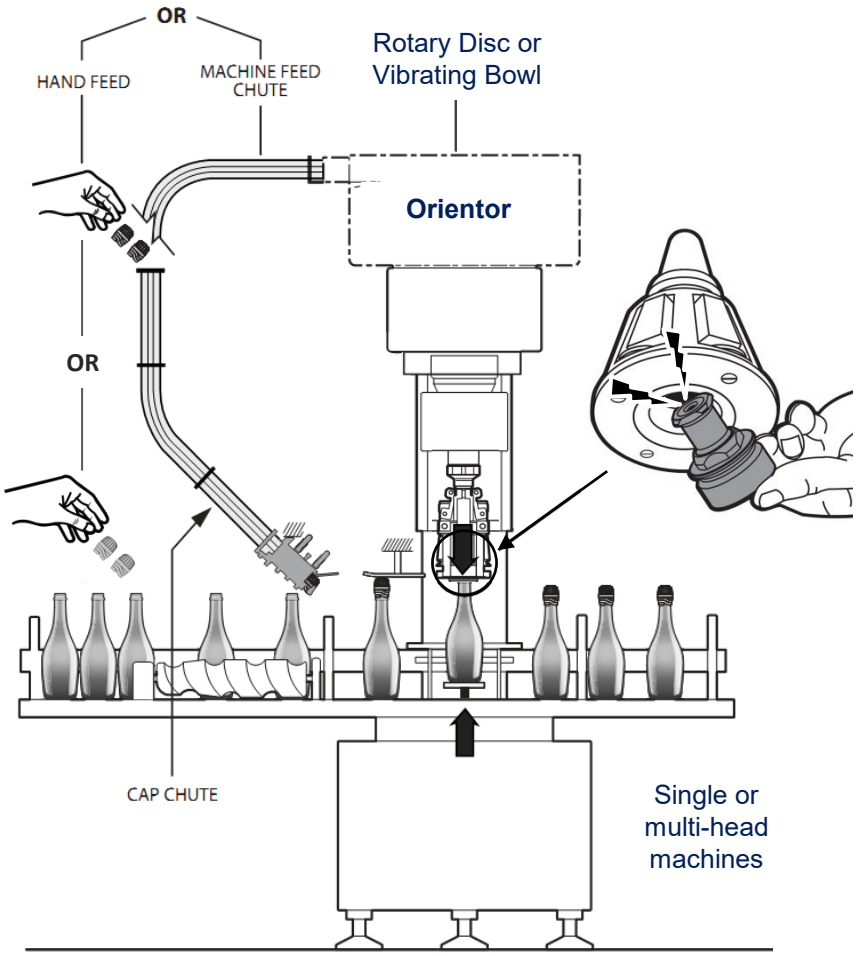

Contact us

Phone: +27 69 6499 837
Email: sales@zorkclosures.co.za
Web: ZORKclosures.co.za

CAPPING HEAD

ZORK SPK

The SPK Capping Head can be fitted most types of single or multi-head bottling machines.

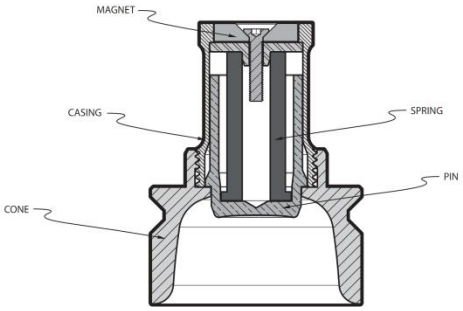

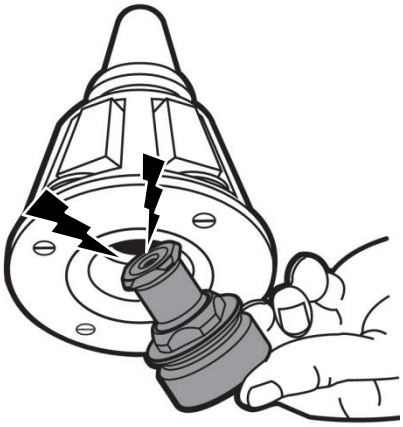

Magnetic Installation

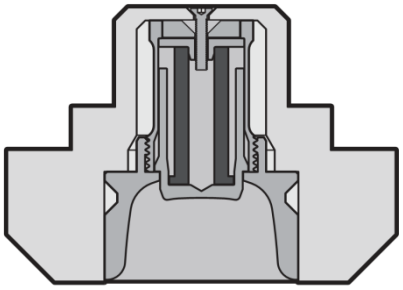

Mechanical Installation

The SPK Capping Head is a change part that is designed to be easily fitted to most types of corking or screw capping machines.

As the pedestal lifts the bottle, or the machine head lowers, the Capping Head gently presses the closure onto the bottle. The spring-loaded pin holds the closure stable during the application process and ensures it is correctly applied to the bottle in the correct sequence.

NOTE: We recommend the use of a "manufacturer approved" Capping Head available from your closure supplier. Use of an unapproved device may void warranties.

The Capping Head can be installed into most machine types using either;

Magnetic installation to most 'Ferro-Magnetic' Pressure Blocks of a 60x30 ROPP head. This minimises cost and allows for virtually zero change over time.

For very high usage/high speed lines we recommend the use of a purpose-built SPK Capping Head specific to each machine or;

Mechanical installation into a custom-built Adaptor to fit a corker or other machine type. Adaptors must be custom made for each machine. External dimensions to fit each bottling machine. Internal dimensions must be machined to the suit the SPK Capping Head. (Refer below).

Recommended top load forces:
Min: 150kgf / 353lbf
Max: 200kgf / 440lbf

Contact us

Phone: +27 69 6499 837
Email: sales@zorkclosures.co.za
Web: ZORKclosures.co.za

ORIENTATION

ZORK SPK

The cap chute feeds the closures from the feeder bowl into the cap dispenser.

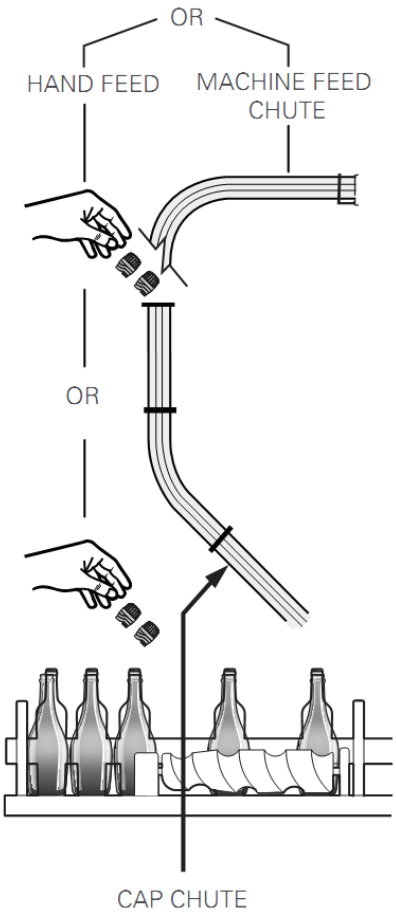

Feeder Bowl

Rotary bowls. For multi-head bottling lines, a modified 60 X 30 screw cap rotary feeder bowl is recommended to orient & feed SPK closures into a Cap Chute.

A 26mm thick rotary star-wheel with a 38mm pocket and a twin air blast on the top station is required to orient & reliably feed the closures

Vibrating bowls. For single-head bottling lines, a modified vibrating feeder bowl is recommended to orient & feed SPK closures into a Cap Chute. Existing drives can be used but customized bowls must
be sourced from the original equipment supplier.

Cap Chute

A 40x50mm cap chute is required to invert & feed the closures into a cap dispenser.

It is recommended that the outside face of the chute be manufactured from a flat plate to prevent closures from rolling in the chute.

The cap chute must be set up to allow free & easy conveyance of the closure through the chute.

High / Low level sensors must be installed to switch the feeder bowl.

The chute must be securely attached to the machine frame & should be vertically adjustable to allow setting for various height bottles.

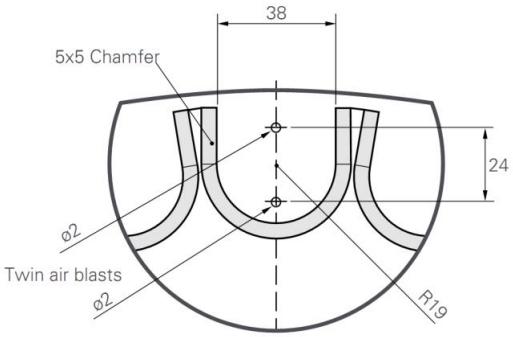

Contact us

Phone: +27 69 6499 837
Email: sales@zorkclosures.co.za
Web: ZORKclosures.co.za

DISPENSER

ZORK SPK

Manual or automatic dispensing is simple and reliable.

Automatic Dispensing

The dispenser height must be set so the bottle clears the underside of the dispenser base plate.

Set the dispenser angle & orientation so the 'pick-off' point is perpendicular to the centre of the star wheel. Ensure the end plate is 2-5° above horizontal.

Trial empty & full bottles to ensure closures are dispensed correctly.

If required an inert gas line can be fitted to the underside of the dispenser to improve Headspace management & extend product shelf life.

Dispenser Location

The dispenser should ideally be located as close to the filler as practically possible to optimise Headspace management and total package oxygen (TPO).

Manual Dispensing

Closures can be manually applied to bottles for trial runs or as an interim step while bottling equipment is being installed.

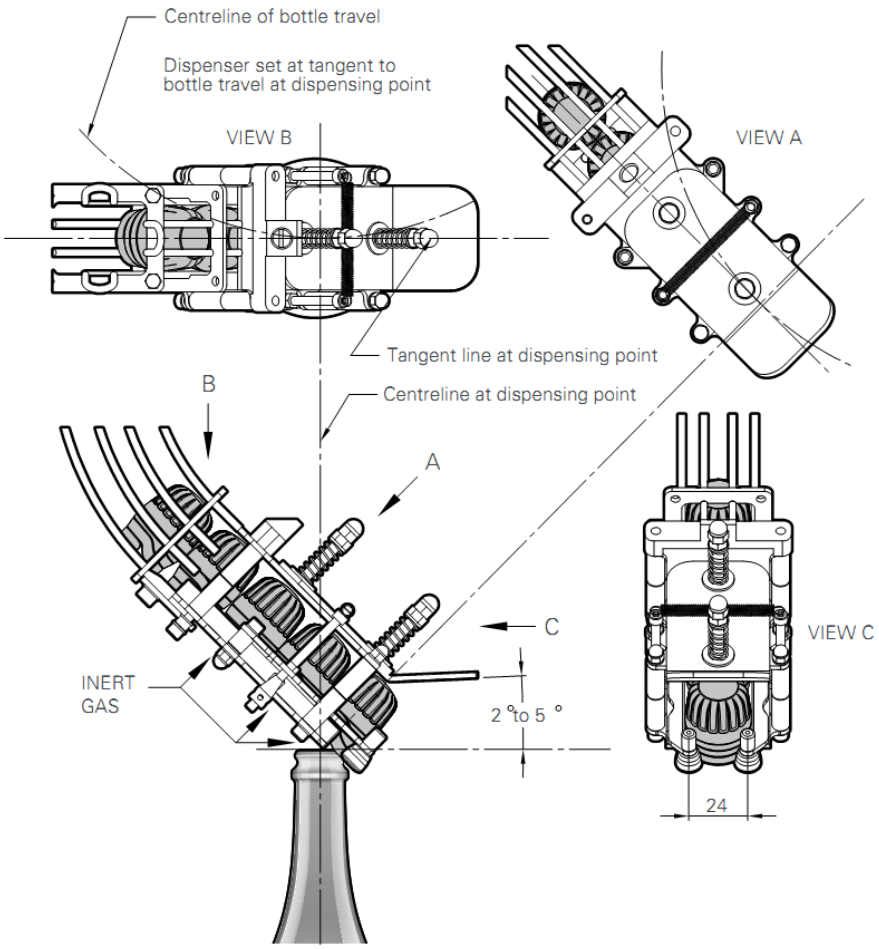

Contact us

Phone: +27 69 6499 837
Email: sales@zorkclosures.co.za
Web: ZORKclosures.co.za